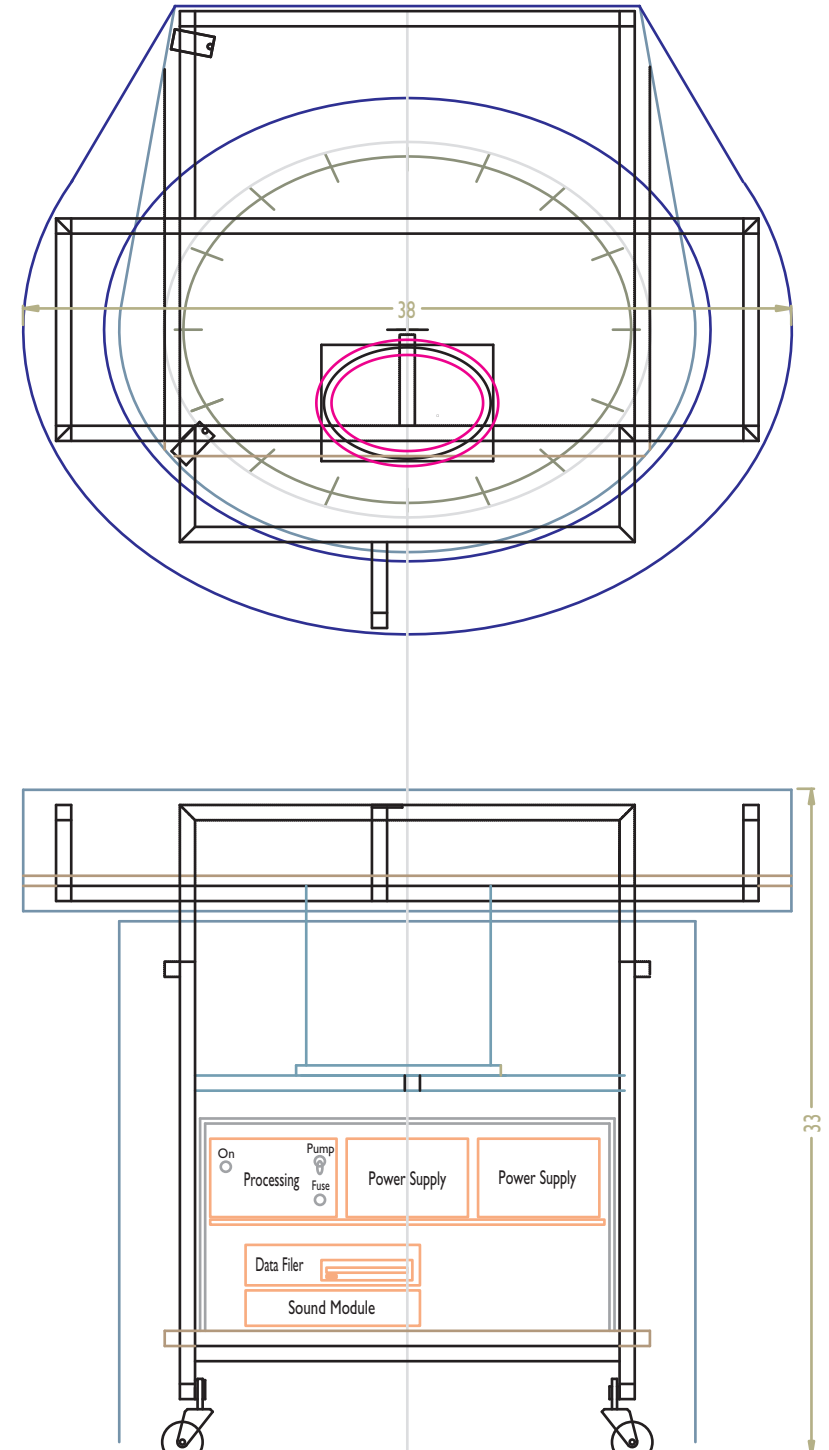
38
33
On
Pump
Processing
Fuse
Power Supply
Power Supply
Data Filer
Sound Module