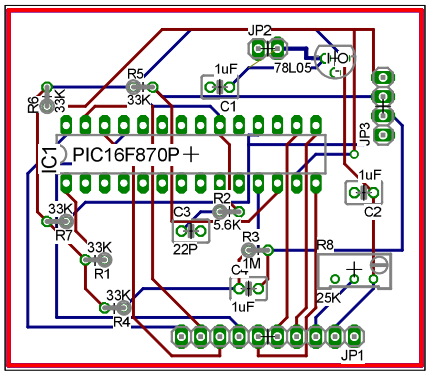
JP2
78L05
1uF
C1
R5
33K
R6
33K
IC1
PIC16F870P
JP3
1uF
C2
R2
5.6K
C3
22P
R3
1M
R8
25K
33K
R7
33K
R1
33K
R4
1uF
JP1