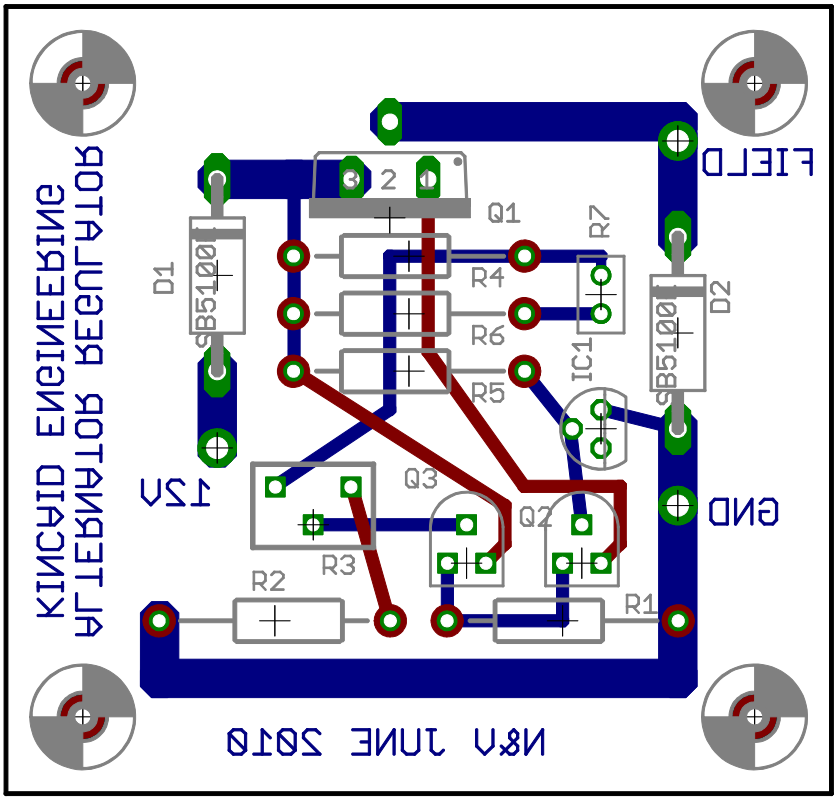
KINCAID ENGINEERING
ALTERNATOR REGULATOR
N8VJ JUNE 2010
FIELD
GND
12V
D1
SB5100
D2
SB5100
Q1
Q2
Q3
R1
R2
R3
R4
R5
R6
R7
IC1
2