Top View

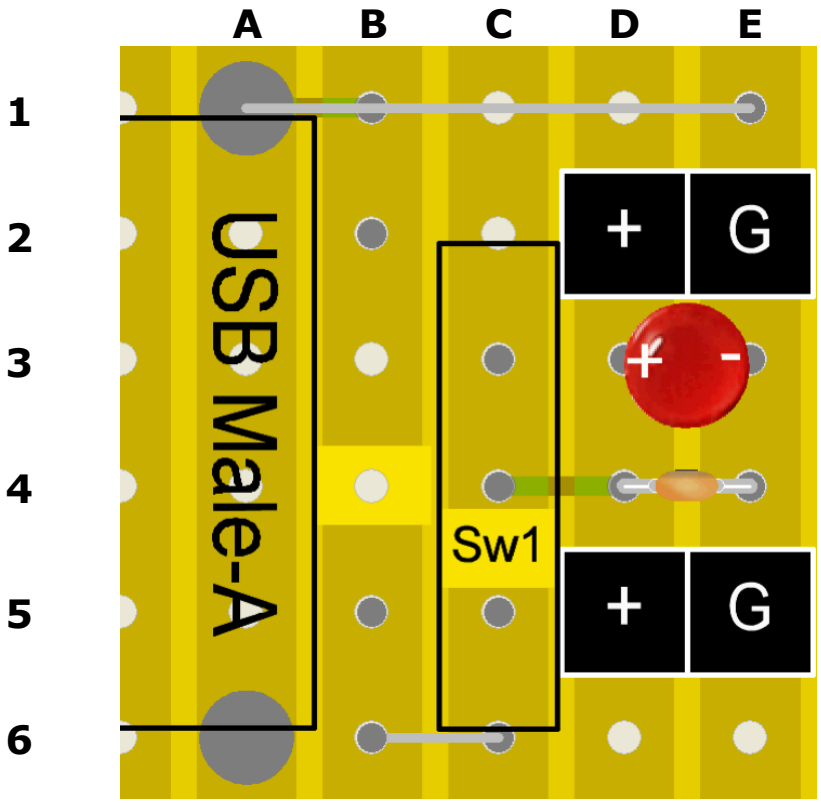
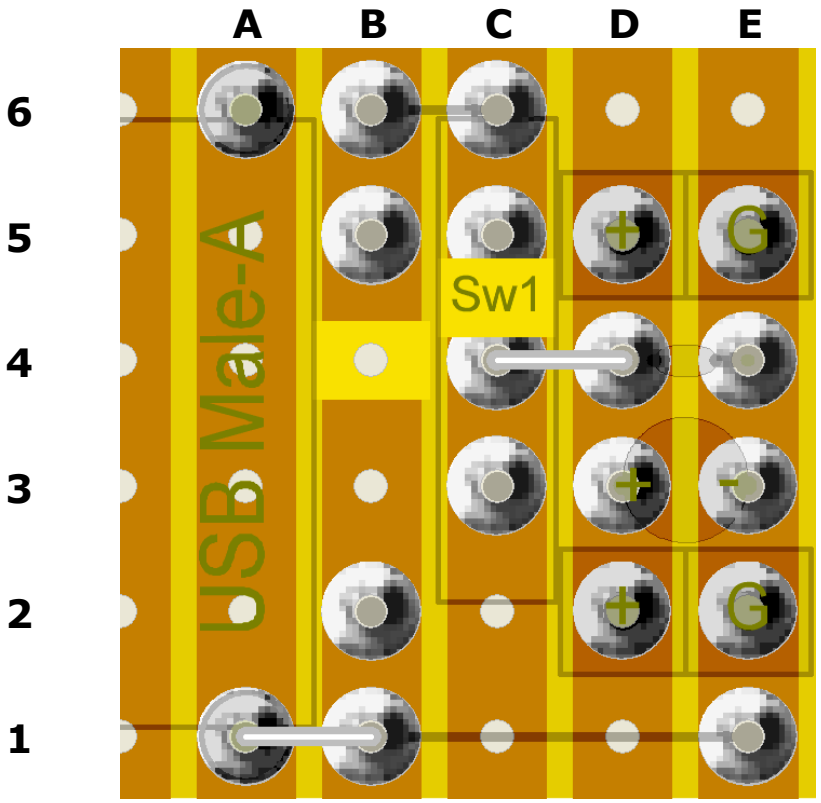
Bottom View