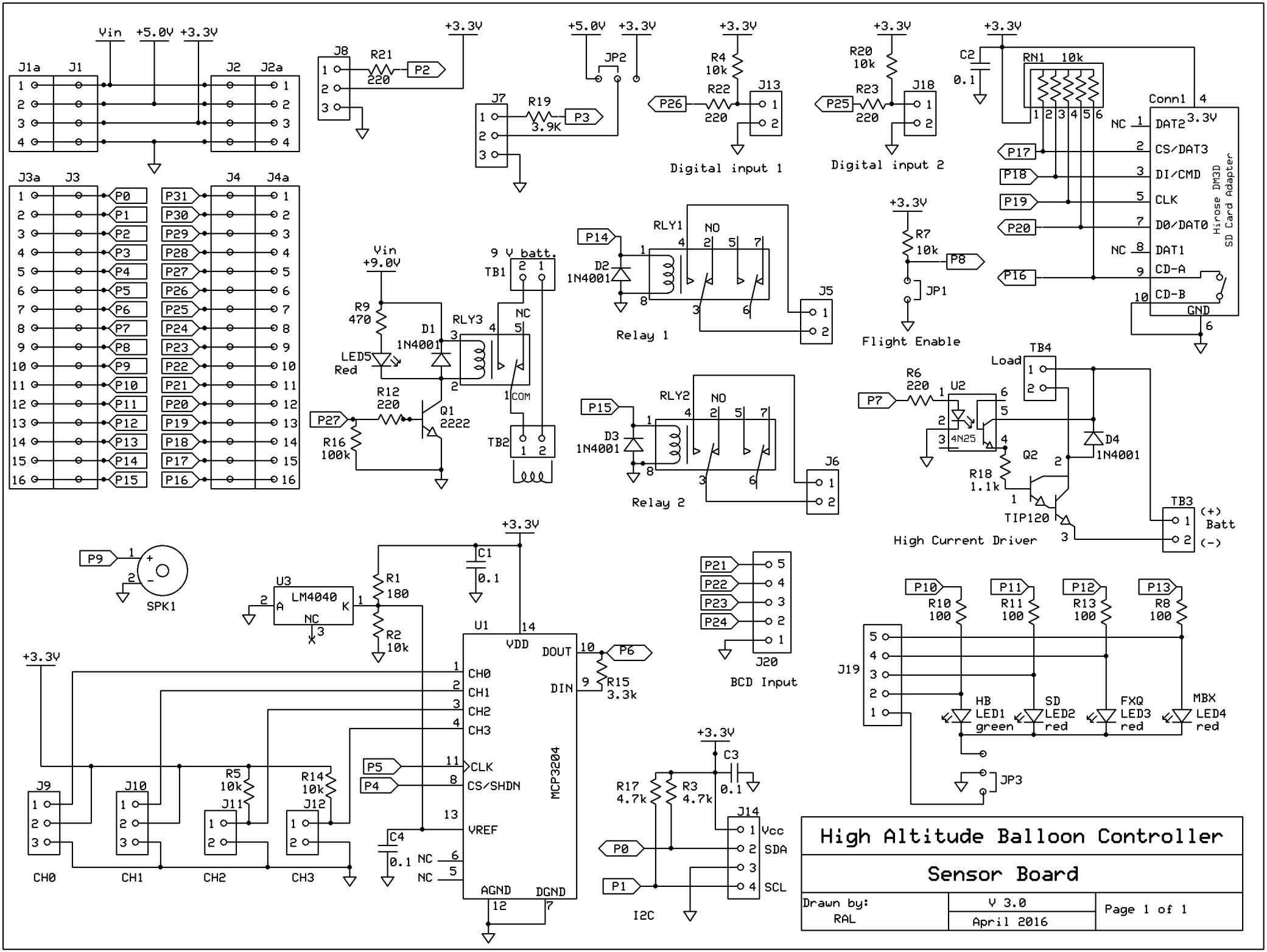

High Altitude Balloon Controller

Sensor Board

Drawn by: RAL	V 3.0	Page 1 of 1
	April 2016	