THE PROTO BUDDY

BY JIM STEWART

For those just getting started in electronics as a hobby, a solderless breadboard (SBB) is the perfect platform for building those first circuits.

Also known as a solderless proto board, an SBB has rows of springy metal contacts embedded in a plastic base. The contacts hold components in place and the rows can be interconnected with wires. Changing a circuit is quick and easy. And when done, the circuit can be disassembled and the components can be saved for reuse in the next circuit.

Figure 1 is a photograph of a typical SBB while Figure 2 is a simplified drawing showing how an SBB is wired internally. An SBB can be purchased from Jameco (part #194299), Electronix Express (part #03MB102), and other vendors.

A pair of contact strips marked by red and blue lines run along both of the long sides. The plus and minus signs show that those strips are often used as power buses. (Not all SBBs have those stripes or +/- signs.) In the center are many short contact strips on either side of the groove that run down the middle of the SBB. The connections do not span the groove.

Components on an SSB

Figure 3 is a detailed view of components mounted on a solderless breadboard. Note how the IC is inserted so that its rows of pins are on either side of the groove. The SBB is designed for easy use of DIP (dual inline package) ICs such as the one shown. The contact holes are spaced 0.1 inches apart from each other and 0.300 inches across the groove.

It's easy to mount leaded parts such as resistors, capacitors, diodes, and ICs on an SBB. However, switches can be a problem; many are not designed to fit an SBB. It's also difficult to connect stranded wire leads such as on a battery connector to an SBB. For stranded wire, something like a screw-terminal would be handy. This is where the Proto Buddy comes in.

The Proto Buddy

The Proto Buddy board (PRB) is shown in Figure 4. It has two SPST switches, two N.O. momentary pushbutton switches, two LEDs with 1K current limiting resistors, and a three-position terminal-block for stranded wire. It uses three sets of pins along one edge to plug into the connector strip on one edge of the SBB as shown. All components on the PRB are wired to pin jacks along its edge. Pieces of solid hook-up wire are used to connect the PRB to the SBB. A Proto Buddy attached to an SBB costs a lot less than the powered breadboards sold by many vendors but with a battery or two attached to it the combo has a lot of the same functionality as those expensive units.

Figure 5 is the schematic of the PRB. The two pushbutton switches are connected by a removable jumper, as are the two LED circuits. The jumpers are there for convenience. For pushbutton switches, it's often the case that both connect to ground. For LEDs, it's often the case that both anodes are connected to +V through resistors. The jumpers can eliminate a few wires in many circuits.

■ FIGURE 1

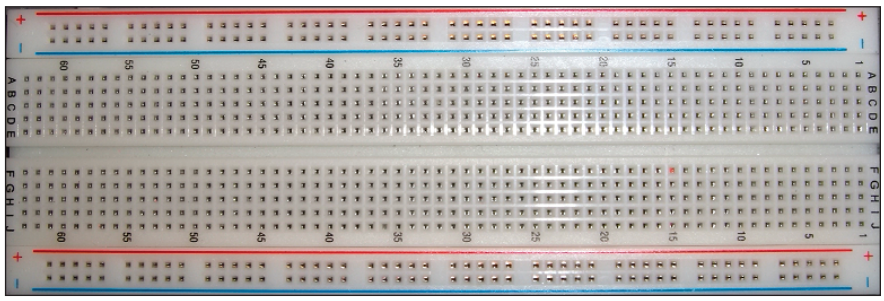

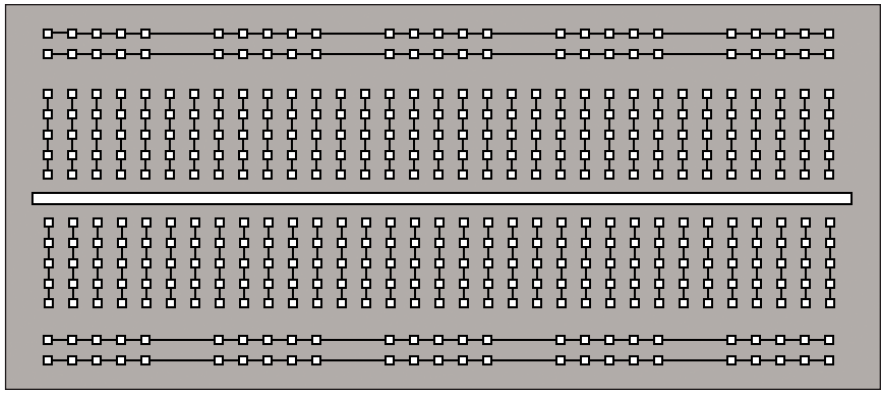

■ FIGURE 2

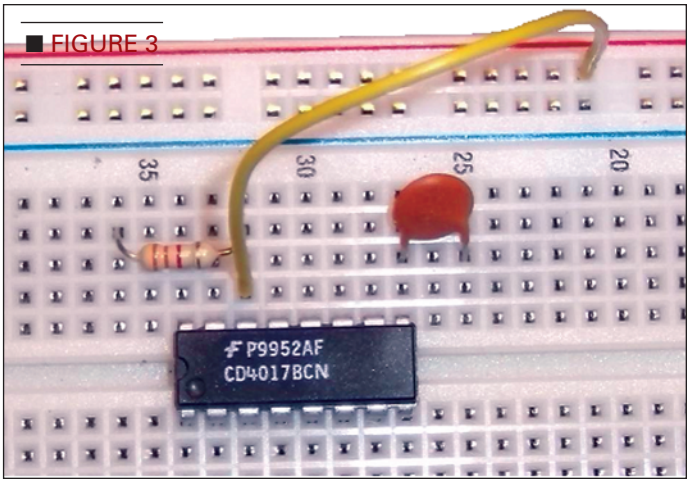

■ FIGURE 3

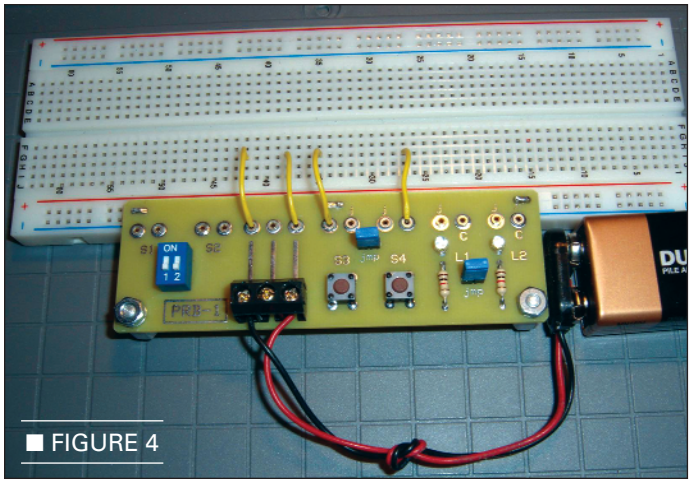

■ FIGURE 4

Construction

The components of the Proto Buddy are mounted on a double-sided printed circuit board (PCB) as shown in Figure 6. The side with PRB-1 printed on it is the component side (C side). The other side is the solder side (S side). As the names imply, components are mounted on the C side and soldered on the S side. However, three sets of mounting pins will be mounted on the S side and soldered on the C side.

Start by inserting the 15 pin jacks into the PCB. **CAUTION**: Make sure you have inserted them on the correct side of the board before soldering. The pin jacks sit loosely in their holes, so they must be held in place before turning over the board to solder them. I used an emery board held by a metal binder clip as shown in Figure 7. You could use anything of that size as long as the material doesn't melt; maybe a popsicle stick or a piece of scrap PCB.

Once the pin jacks are soldered in place, mount the two position DIP switch (S1 and S2) and bend the four pins to secure it to the board. Insert S3 and S4; they have springy leads that should hold them on the board without bending the leads over. Turn the board over and solder all the switches.

The LEDs must be oriented correctly before mounting. One LED lead is longer than the other. The long lead is the anode and the short lead is the cathode. The cathode lead is closest to the pin jack. If you look carefully, you might see a flat section on the plastic base of the LED next to the cathode lead. (Refer to Figure 6).

Mount the two LEDs and bend their leads slightly to hold them in place. Mount the two resistors and bend their leads slightly. Turn the board over and solder the leads. Clip off any excess lead length.

The three position terminal block is mounted next. Its leads are too heavy to bend, so secure it to the board with rubber bands. Make sure the bands are positioned away from the pins so they don't melt, then solder them to the board. Remove the rubber bands.

The two jumpers (designated jmp) are implemented with pairs of header pins on 0.1 inch centers. Usually header pins come in multiple pin strips (e.g., an eight pin header strip). Such strips are designed to be snapped into pieces, so snap off two pairs. You can use a bit of putty to hold the pairs of pins to the board. Solder them to the board and remove the putty. Push a jumper block onto each pair of header pins.

Three pairs of header pins are used to hold the Proto Buddy to the SBB; they are mounted on the S side of the board and soldered on the C side. Follow the same procedure used for the jumper pins.

The soldering is done. Use some rubbing alcohol and an old toothbrush to remove any flux

■ FIGURE 5

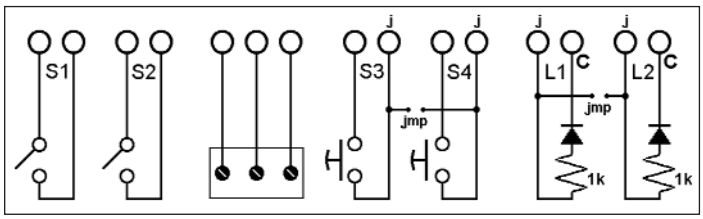

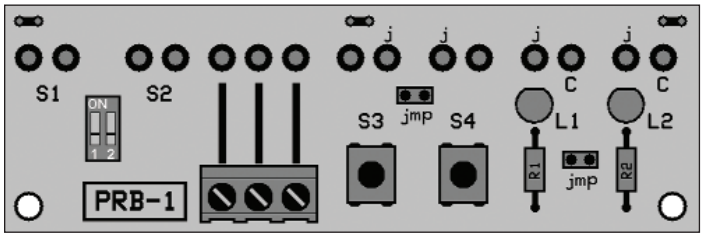

■ FIGURE 6

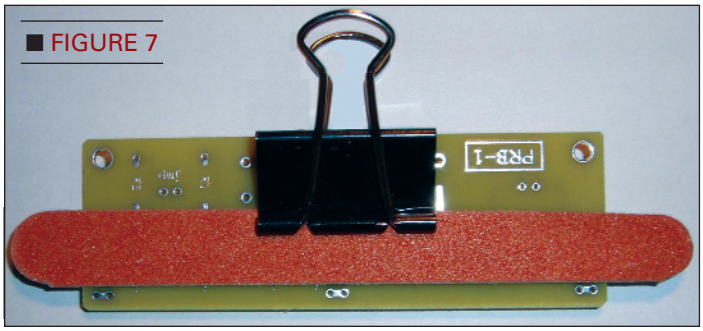

■ FIGURE 7

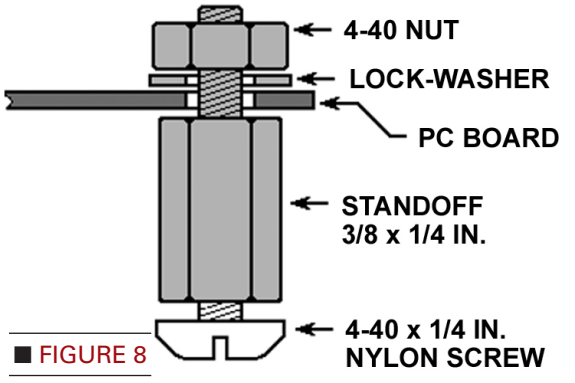

■ FIGURE 8

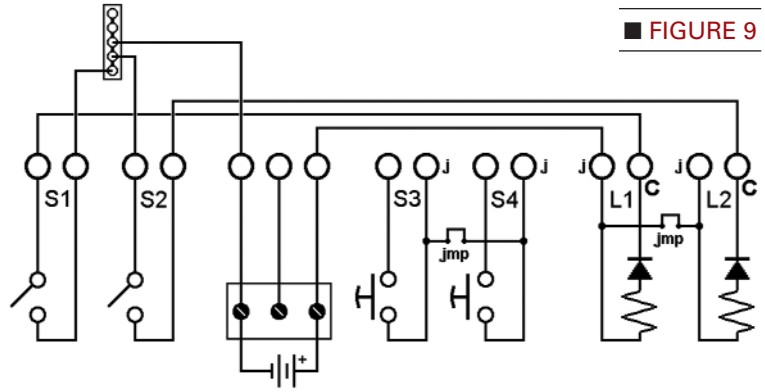

■ FIGURE 9

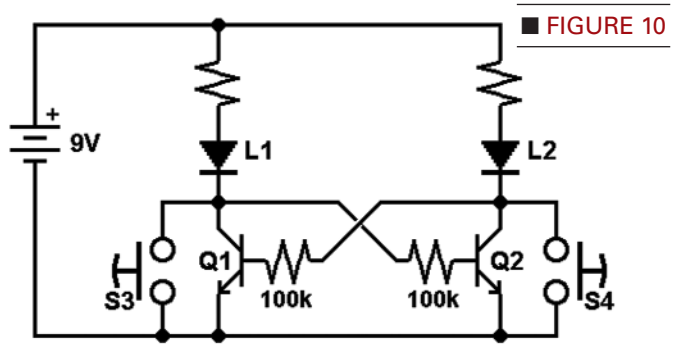

■ FIGURE 10

residue and examine the board for missing or bad solder connections; fix any bad ones.

The final step in construction is to add the two "legs." For the Proto Buddy to be level with the SBB, two aluminum, male/female, 4-40 threaded hex standoffs are required: one in each of the two corner holes on the PCB board as shown in Figure 8. Note the nylon screw used to prevent scratching when the Proto Buddy sits on a table. (The hardware in Figure 8 is shown loose, but you should tighten everything.)

A	B		X
0	0		1
0	1		1
1	0		1
1	1		0

■ TABLE 1

Testing

Mount the Proto Buddy to a solderless breadboard by inserting the three sets of mounting pins into the contact strip on the edge of the SBB (refer to Figure 4). Connect a 9V battery to the terminal block (also shown in Figure 4). Cut six four inch pieces from a roll of 22 guage solid insulated hook-up wire. Strip off about 1/4 inch of insulation from both ends of each piece.

Insert one end of a wire into the pin jack connected to the positive (+) side of the battery and connect the other end to one of the LED pin jacks marked with 'j.' Use another piece of wire to connect one of the S1 pin jacks to the L1 pin jack marked with 'C.' Use another piece of wire to connect one of the S2 pin jacks to the L2 pin jack marked with 'C.' Use two pieces of wire to connect the other pin jacks of S1 and S2 to a single connector strip on the SBB. Use a piece of wire to connect the same connector strip to the pin jack that goes to the negative (-) side of the battery.

Figure 9 shows the circuit you just built. As you operate S1, L1 should go on and off. Likewise, as you operate S2, L2 should go on and off. Once you verify the circuit works, rewire it to use S3 and S4 instead of S1 and S2.

Build a Digital Circuit

We will build a circuit called a latch using two transistors. Inputs are the two pushbutton switches and outputs are the two LEDs. Figure 10 is a schematic while Figure 11 shows the wiring. Q1 and Q2 are NPN transistors such as PN2222 or 2N3904. Almost any NPN will do. You can find datasheets on the Internet.

When you first apply power, one LED will be lit and the other will be off. Momentarily press the pushbutton

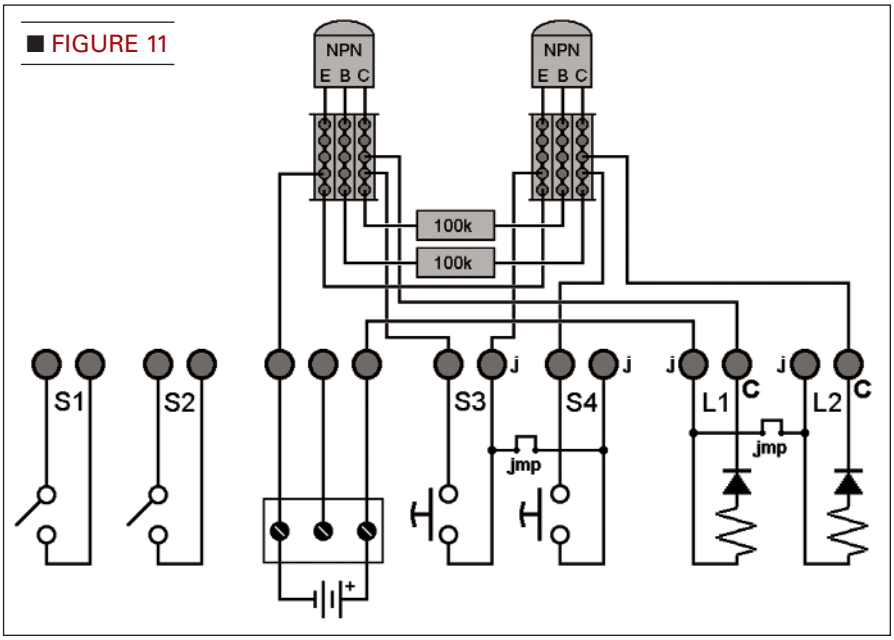

■ FIGURE 11

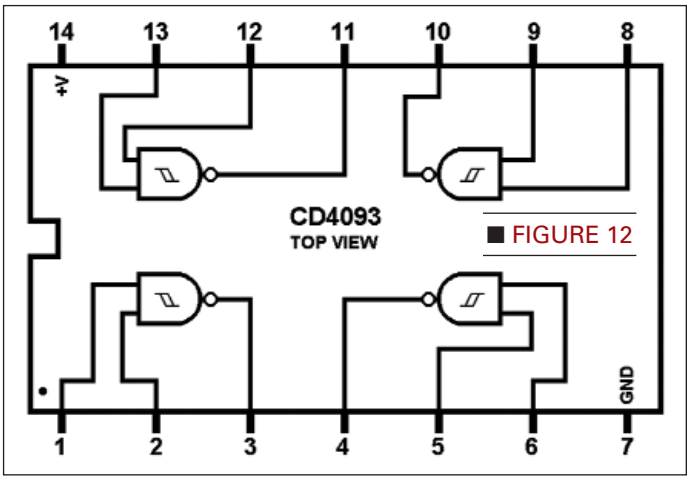

■ FIGURE 12

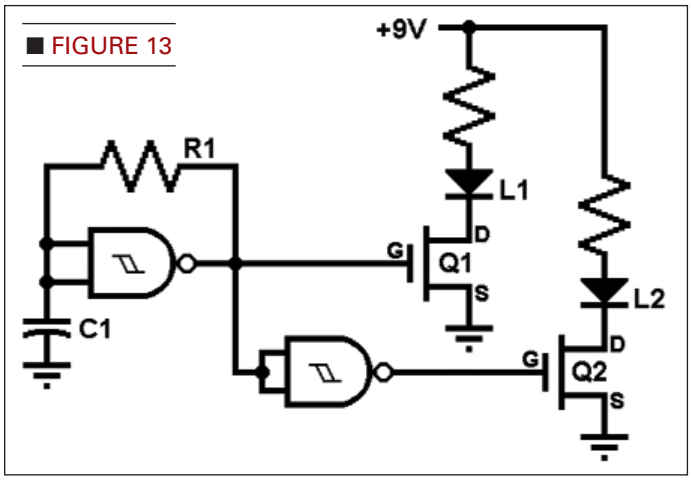

■ FIGURE 13

going to the off LED; it will become lit and the other one will go off. It will stay that way until you press the other pushbutton. The circuit is often called an SR Latch where S and R stand for SET and RESET. It's also a flip-flop: one bit of memory.

Build an LED Blinker

Just for fun, let's build a circuit that will blink the two LEDs in an alternate pattern; when one is on, the other will be off. We will use a CMOS digital IC: the CD4093. The IC contains four two input NAND gates as shown in Figure 12.

The signals in digital ICs are either high (+V) or low (0V). The output of a gate will switch between high and low, depending on whether its inputs are high or low. The input-output behavior of a gate is defined by its truth table. Table 1 is the truth table for a two-input NAND gate, where A and B are the inputs and X is the output. A 0 represents low (0V) while a 1 represents high (+V).

The CD4093 has what's called Schmitt trigger inputs. That means the value of the input voltage required for a 1 depends on whether the input is switching from low to high, or from high to low. It's meant to guarantee a "clean" transition on the output but, as we will see, it also allows us to build a simple square wave oscillator.

The circuit you will build is shown in Figure 13. Unlike Figure 11, this circuit is shown as a schematic. Part of your job will be to translate Figure 13 into something like Figure 11 before you start to build the circuit on your solderless breadboard. Q1 and Q2 are MOSFET transistors. Use a device like the 2N7000 or the BS170. Use a 1 µF capacitor for C1; either monolithic or tantalum. For R1, start out with a 1 megohm resistor which will give a slow blink. Try using smaller resistors to make it blink faster. When the LEDs blink fast enough, they will appear to be on all the time.

Wrap-up

Now that you've got your Proto Buddy and an SBB, you can breadboard all sorts of circuits. You can find many circuits in issues of *Nuts & Volts*, and on the Internet. It's even more fun to dream up your own circuits and try them out. Instead of a battery, you can get a wall wart power module from many vendors; the surplus units are usually inexpensive. So, go have some fun with your new Buddy. **NV**

PARTS LIST

ITEM	QTY	DESCRIPTION
■ S1, S2	1	DIP Switch, Two SPST Switches
■ S3, S4	2	N.O. Momentary Push Button Switch
■ TB	1	Three Position Terminal Block
■ L1, L2	2	LED, T1 Bright
■ R1, R2	2	Resistor, 1K , 1/4W, 5%
■ R1 (EXP)	1	Resistor, 1M , 1/4W, 5%
■ C1 (EXP)	1	Capacitor, 1 µF
■ IC1 (EXP)	1	CD4093B
■ Q1, Q2 (EXP)	2	Transistor 2N7000
■ N/A	15	Pin Jacks
■ N/A	10	Header Pins (Five Pair)
■ N/A	2	Jumper Block
■ N/A	2	HEX Standoff, M/F, 4-40, 1/4 in, 3/8 in long
■ N/A	2	4-40 Nut
■ N/A	2	#4 Lock Washer
■ N/A	1	Printed Circuit Board

It might be useful to include some 22 guage, solid, insulated hook-up wire; maybe five feet of red, five feet of black, and five feet of yellow.