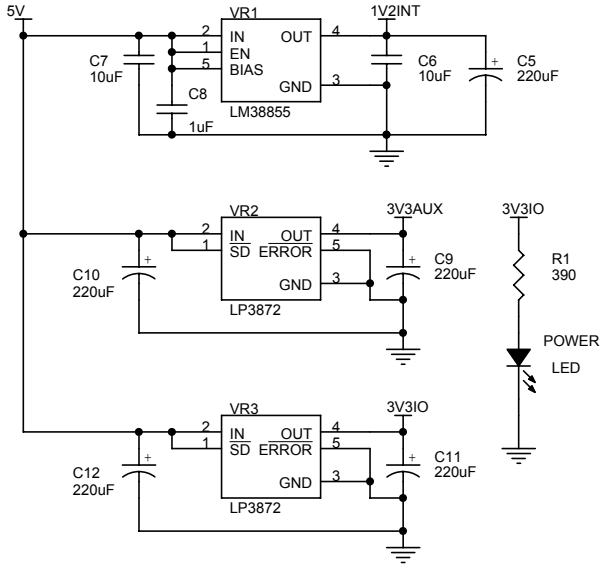
5V
VR1
IN
EN
BIAS
OUT
GND
LM38855
1V2INT
C7
10uF
C8
1uF
C6
10uF
C5
220uF
VR2
IN
SD
OUT
ERROR
GND
LP3872
3V3AUX
C10
220uF
C9
220uF
3V3IO
R1
390
POWER
LED
VR3
IN
SD
OUT
ERROR
GND
LP3872
3V3IO
C12
220uF
C11
220uF